AR 190 SERIES - ALUMINIUM

AR 190 diffuser

USE

- Air supply for high-ceiling buildings such as airports and exhibition centres.
- Long-throw diffusion to provide airflow to occupied areas, ideal for avoiding stratification of air in heating applications.
- Adjustable diffusion, can be inclined to 30°.
- Wall or ceiling mounted, or floor around perimeter.

CONSTRUCTION

- Spun aluminium diffuser.

FINISH

- Epoxy paint, RAL 9010 White - 85%.

ATTACHMENT

- AR190: visible screw attachment on rectangular duct or on plenum.
- AR190C: direct attachment to circular air supply duct.
- Screw cover for concealed attachment (supplied as standard).

ACCESSORIES

- AR190C: supplied with circular connection sleeve.

STANDARD DIMENSIONS

- Available from Ø 160 to Ø 400.

TECHNICAL DETAILS

- See selection tables and scales on following pages.
- See mixing capacity at end of chapter.

DIMENSIONS

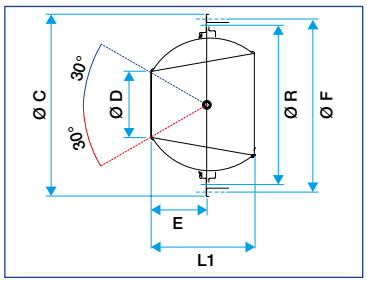

AR 190 diffuser

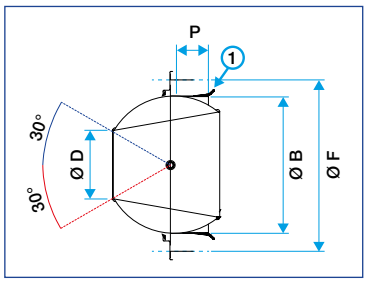

AR 190 C-1 diffuser: sleeve for circular duct

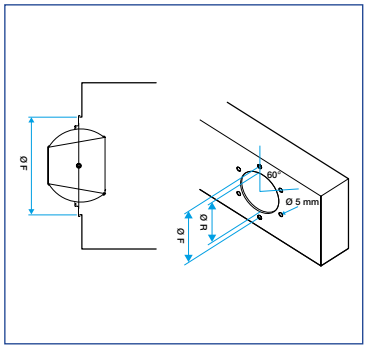

Mounted on rectangular duct

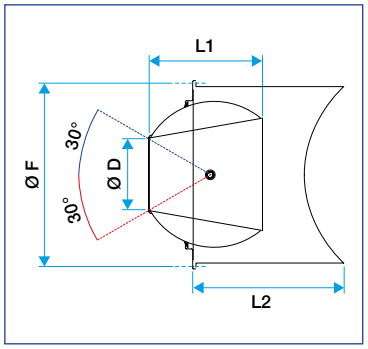

Mounted on circular duct

STANDARD DIMENSIONS

Model	Diameter (mm)	L1 (mm)	E (mm)	Ø B (mm)	Ø C (mm)	Ø D (mm)	P (mm)	Ø R (mm)	Ø F (mm)	L2 (mm)
80	160	118	52	158	245	80	50	226	205	200
110	200	140	82	198	285	110	50	266	250	300
150	315	220	128	313	385	150	50	366	352	300
200	400	275	172	398	485	200	50	466	452	350
230	400	275	130	398	485	230	50	466	452	350

AR 190 SERIES

STANDARD RANGE

Model	AR 190	AR 190 C (with sleeve)
	Code	Code
Ø 160 / type 80	11003026	11003016
Ø 200 / type 110	11003027	11003017
Ø 315 / type 150	11003028	11003018
Ø 400 / type 200	11003029	11003019
Ø 400 / type 230	11003030	11003020

Attachment	Finish
• AR190: visible screw attachment on rectangular duct. • AR190C : direct attachment to circular duct.	• Aluminium with epoxy paint coating, RAL 9010 white.

AR 190 SERIES

SELECTION - AIR SUPPLY WITHOUT CEILING EFFECT

Ak (m^2)	Diameter (mm)	Airflow (m^3/h)	100	200	300	500	800	1000	1200	1500	2000	2500
0.0054	Ø 160 / 80	Lw (dB(A))	6	26								
		ΔP (Pa)	16	57								
		Lt (m)	2.8	5.7								
0.0132	Ø 200 / 110	Lw (dB(A))			16	31	44					
		ΔP (Pa)			23	60	143					
		Lt (m)			5.4	9.1	23					
0.0179	Ø 315 / 150	Lw (dB(A))					39	43	48			
		ΔP (Pa)					81	123	172			
		Lt (m)					12.5	23	28			
0.0308	Ø 400 / 200	Lw (dB(A))					26	32	38	41	50	
		ΔP (Pa)					30	45	63	95	162	
		Lt (m)					9.5	11.9	14.2	17.8	23.7	
0.0401	Ø 400 / 230	Lw (dB(A))						26	31	37	46	49
		ΔP (Pa)						28	39	59	100	151
		Lt (m)						10.4	12.5	15.6	20.8	26

The Lw (dB(A)) values do not take into account any noise attenuation in the room. Vt = 0.5 m/s

CORRECTIONS FOR OTHER Vt

Vt (m/s)	0.25	0.37	0.5	0.63	0.75
Lt	x 2	x 1.33	x 1	x 0.8	x 0.67
Lt with ceiling effect	x 2.8	x 1.8	x 1.4	x 1.1	x 0.9

CORRECTIONS FOR CONCENTRATED JET

Number of diffusers	Lt (A)	Lt (B)	Lw (NR)
2	x 1.14	x 1	+ 3
3	x 1.20	x 1	+ 5
4	x 1.25	x 1	+ 6

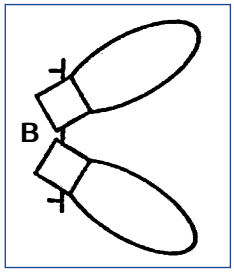

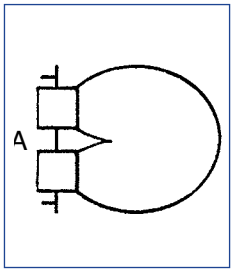

CORRECTIONS FOR DAMPER

No damper	Damper 100 % open	Damper 50 % open	Damper 25 % open
DPt x 1.00	DPt x 1.00	DPt x 2.25	DPt x 5.90
Lw + 0	Lw + 0	Lw + 10	Lw + 20

CORRECTIONS FOR VERTICAL AIR SUPPLY DEPENDING ON TEMPERATURE

ΔT (°C)	- 20	- 15	- 10	- 5	0	5	10	15	20
Lt (m)	x 2.5	x 2	x 1.7	x 1.3	x 1	x 0.7	x 0.5	x 0.4	x 0.33